ST11018

Stepper Motor - NEMA 42

OPTIONS

Controller

Encoder

VERSIONS

Type	Current per Winding A	Holding Torque Ncm	Resistance per Winding Ohm	Inductance per Winding mH	Rotor Inertia gcm^2	Weight kg	Length „A“ mm
ST11018S5504	5.5	1170	0.7	9.8	5500	5	99
ST11018M6504	6.5	2100	1.15	15.2	10900	8.4	150
ST11018L8004	8	2500	1	17.1	16200	11.7	201

ORDER IDENTIFIER

ST11018S5504-
A = single shaft
B = double shaft

DIMENSIONS (IN MM)

ST11018

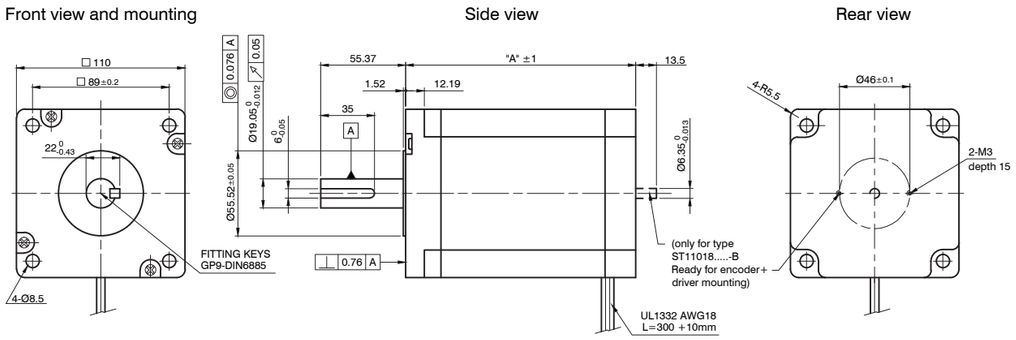

ST11018

Stepper Motor - NEMA 42

TORQUE CURVES

ST11018S5504

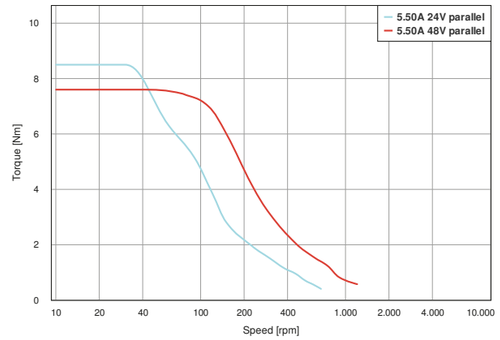

ST11018M6504

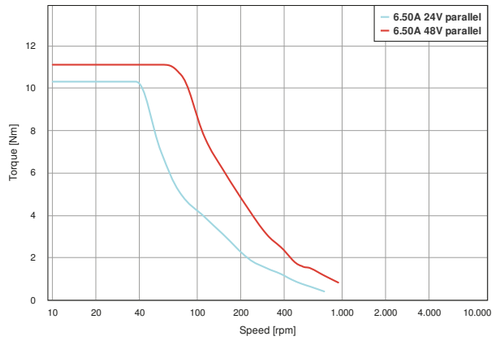
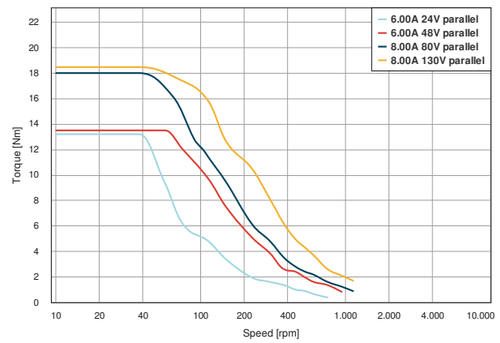
ST11018L8004